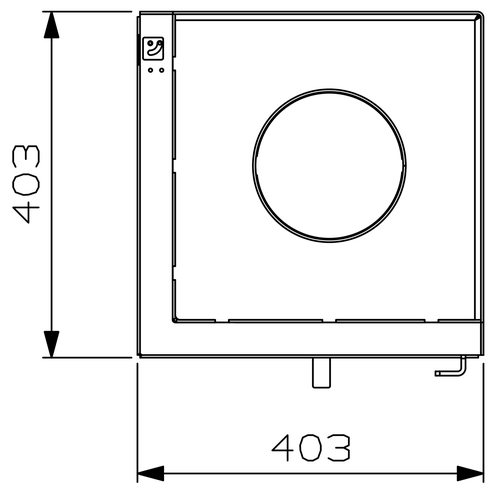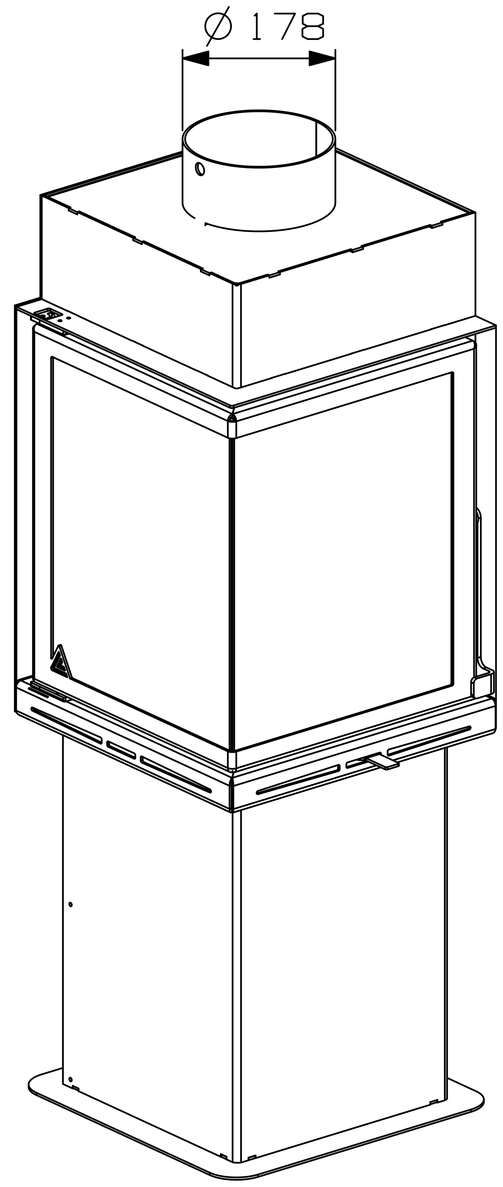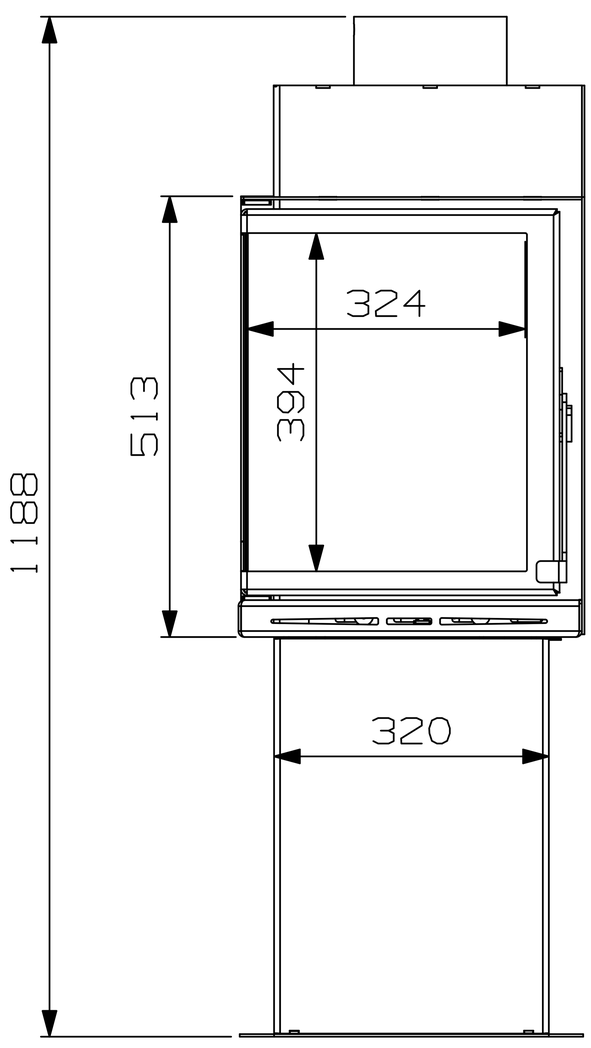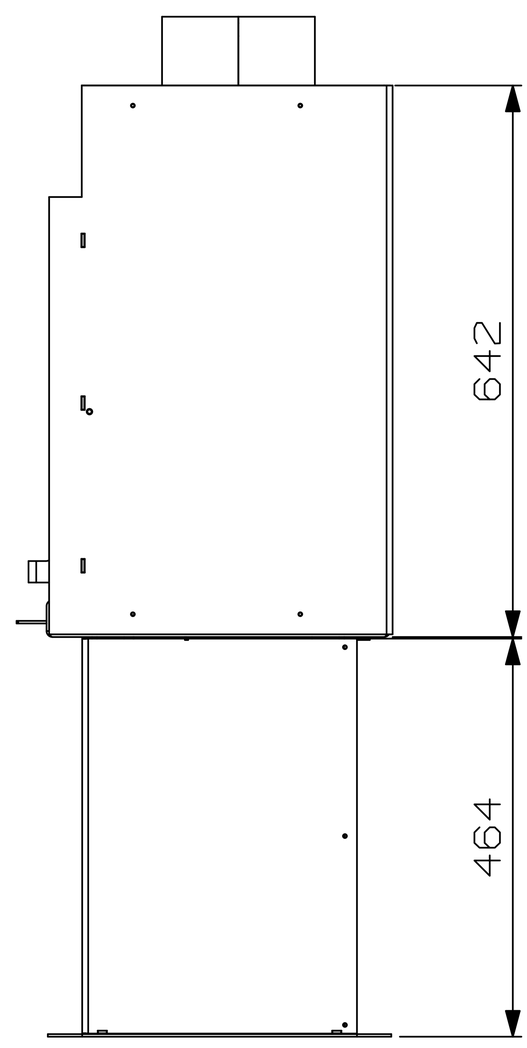40 X 40