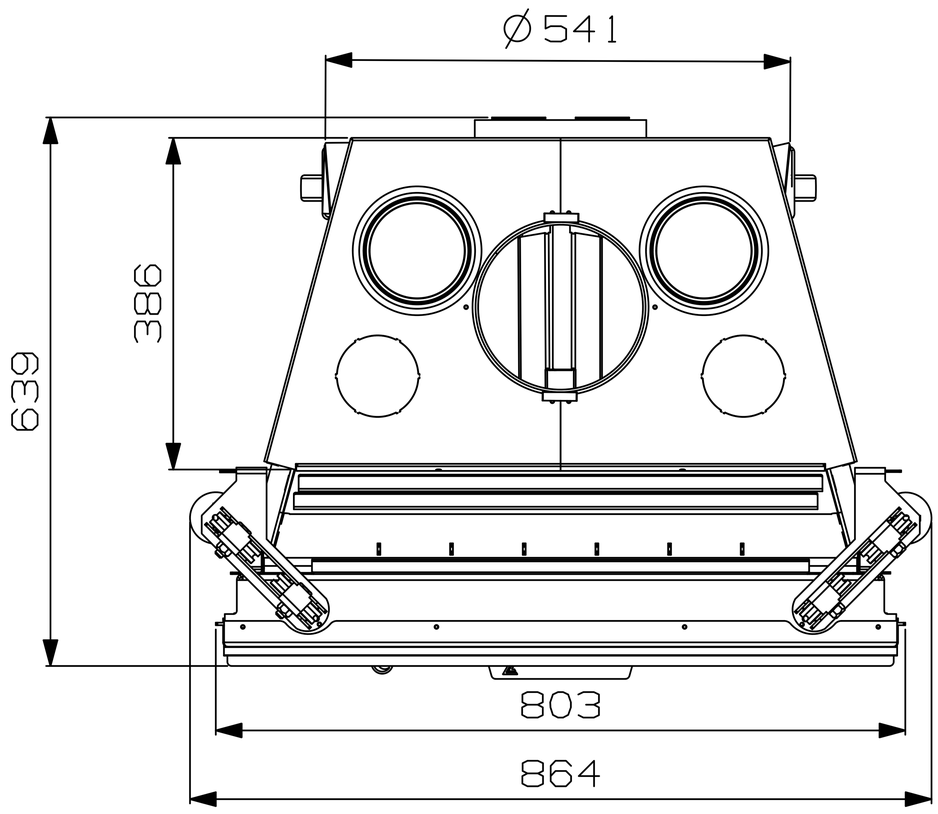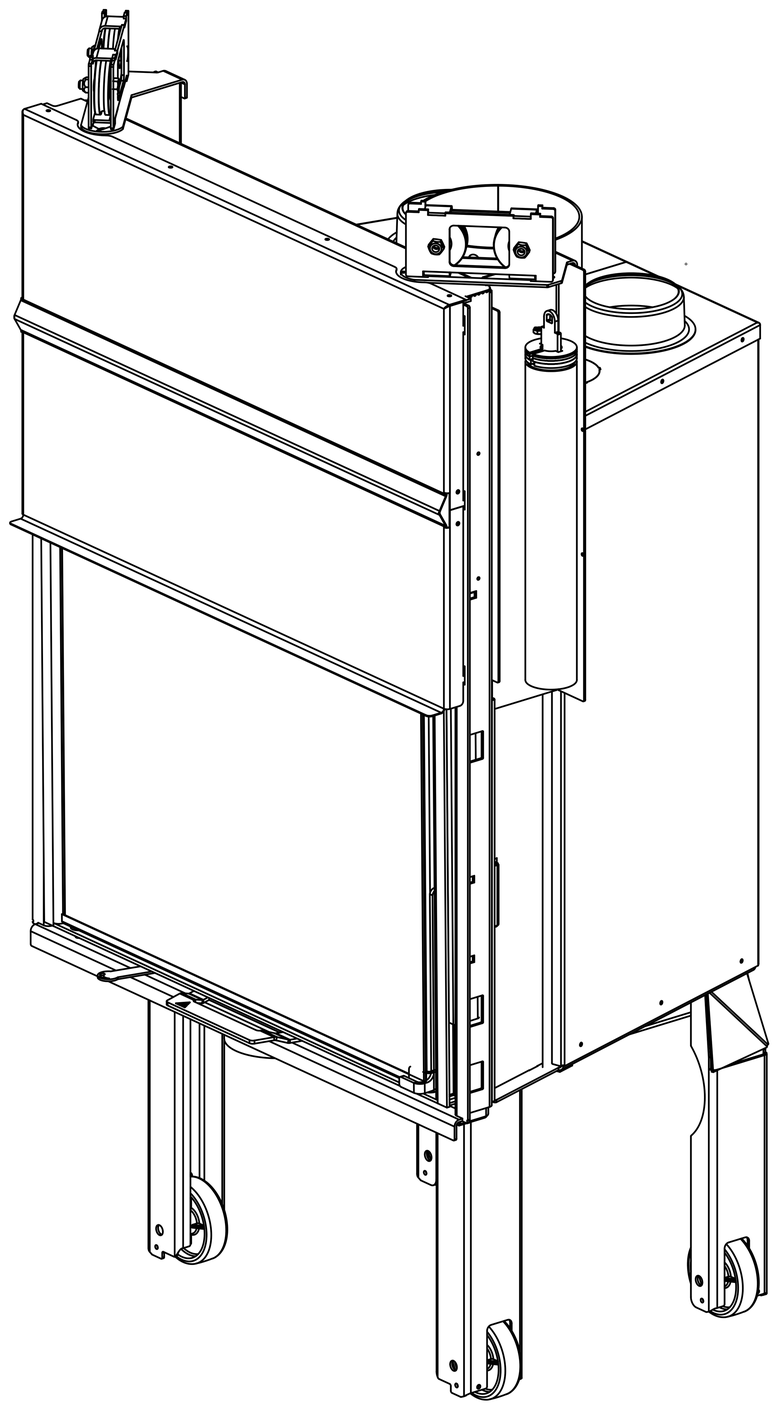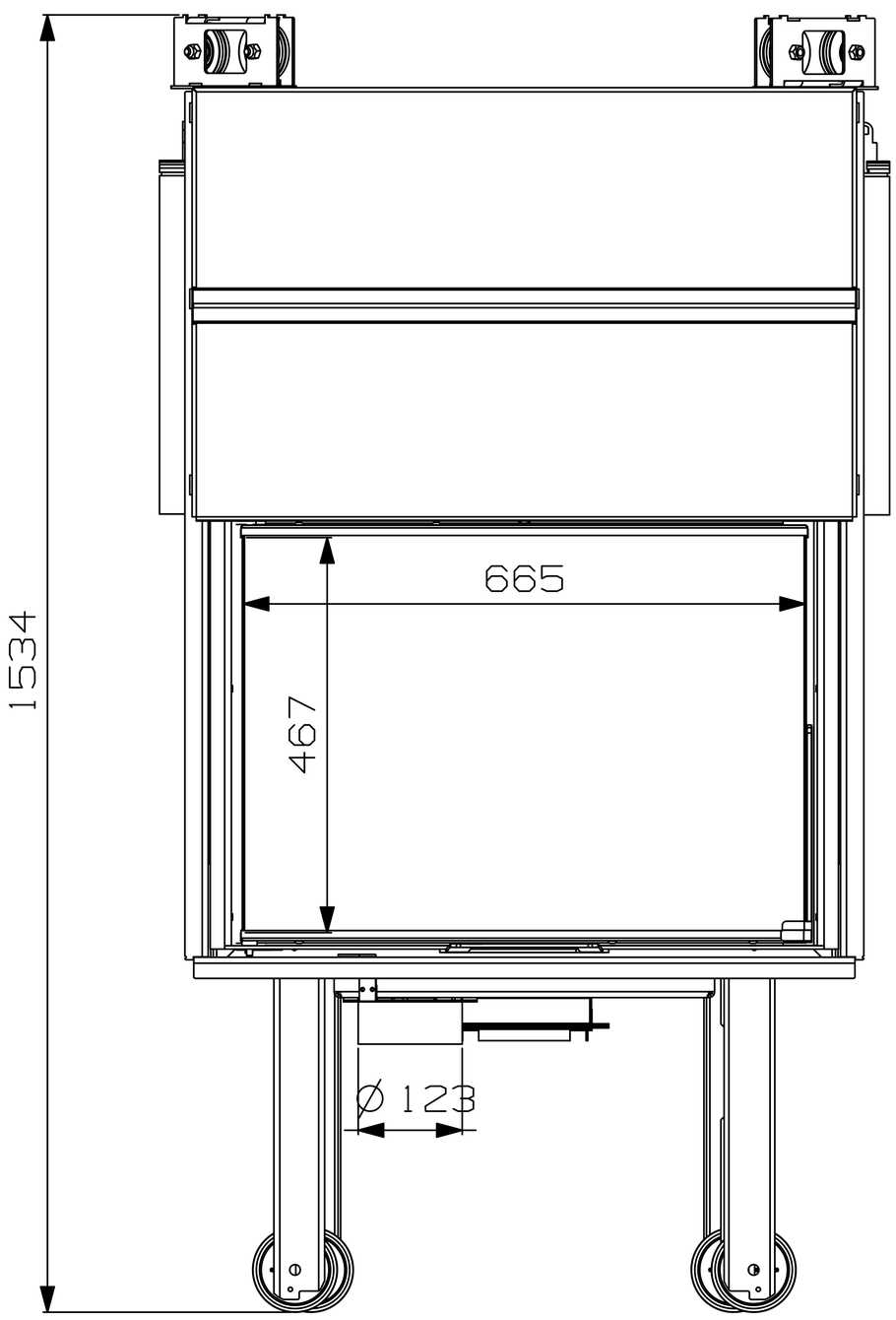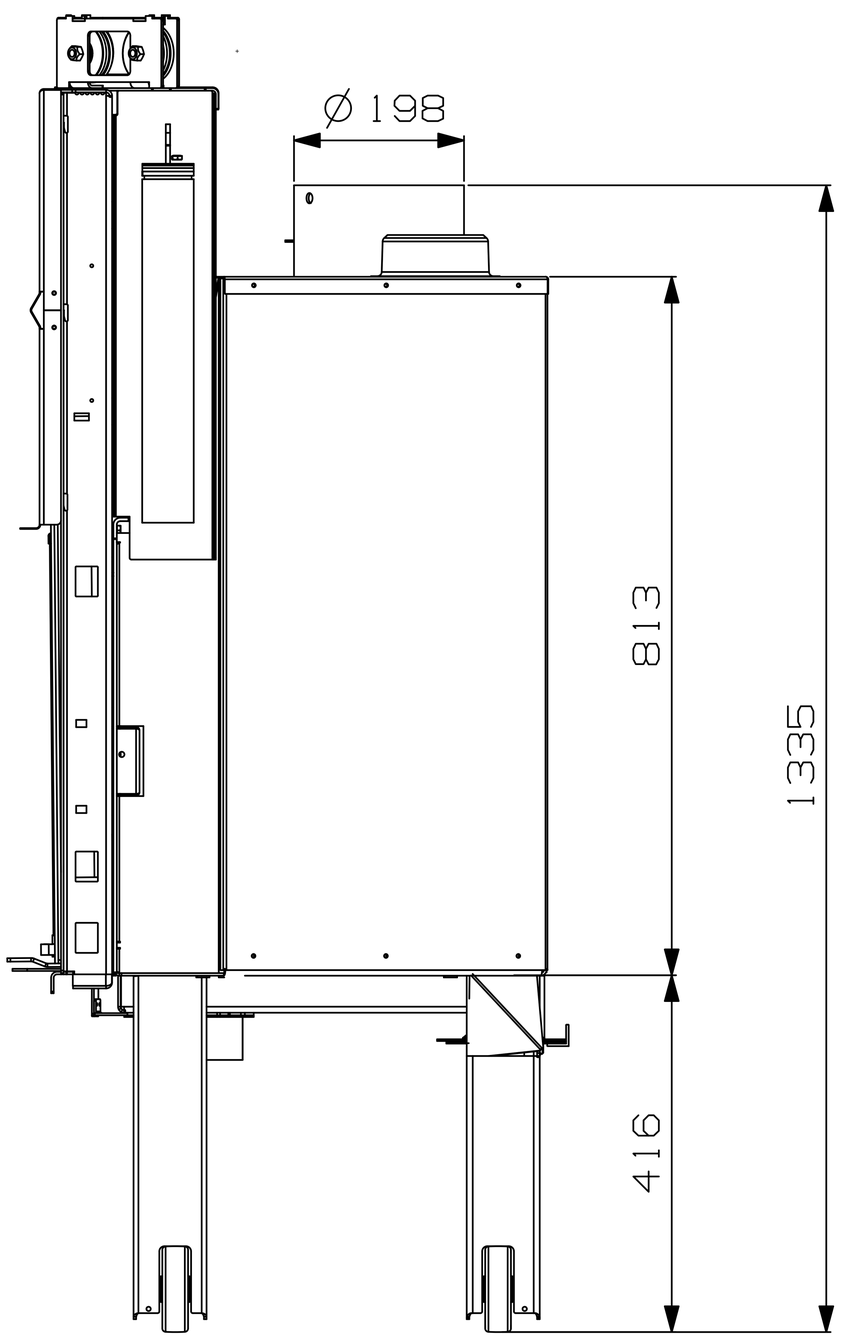AERO-S FLAT 70 BL LIFT