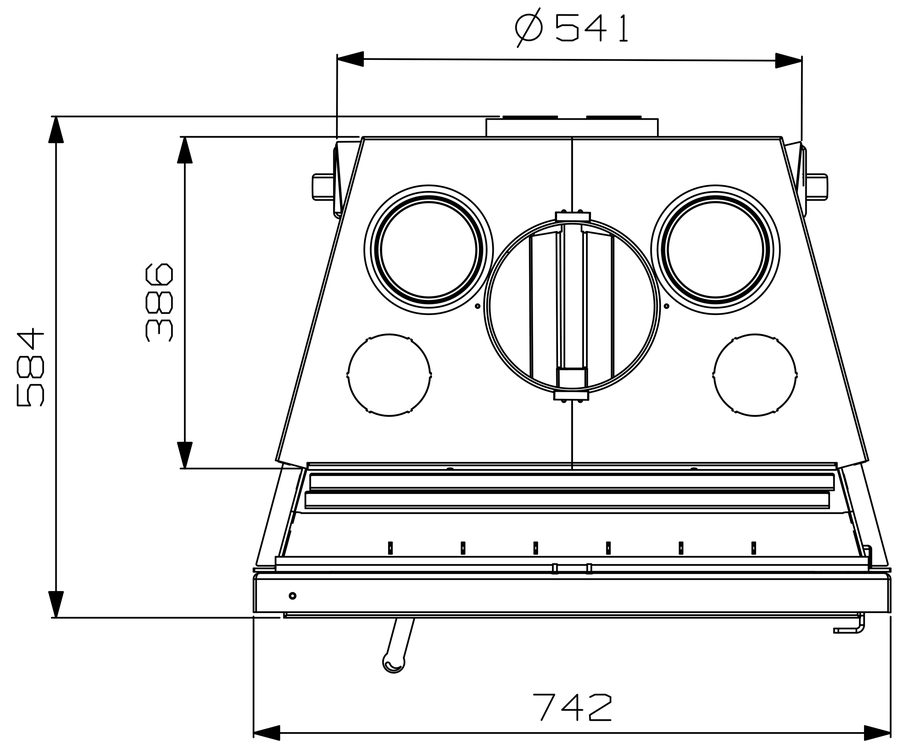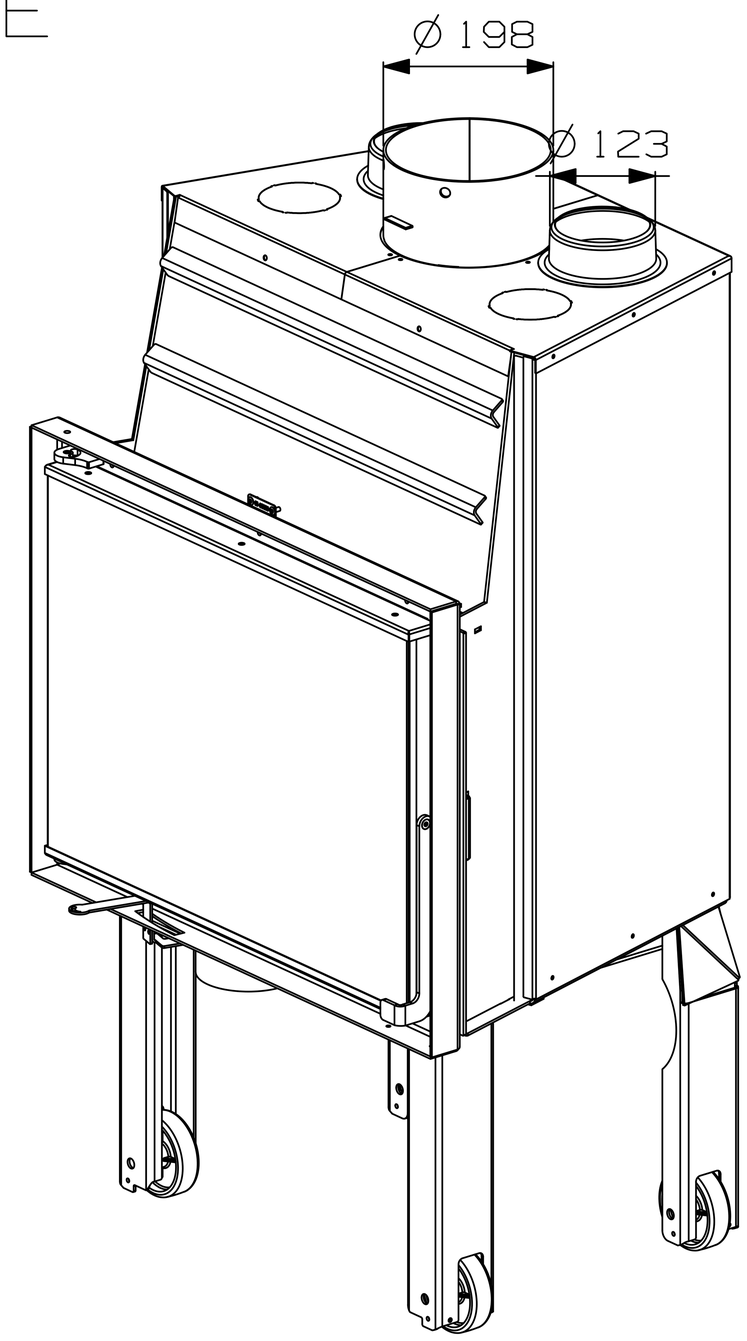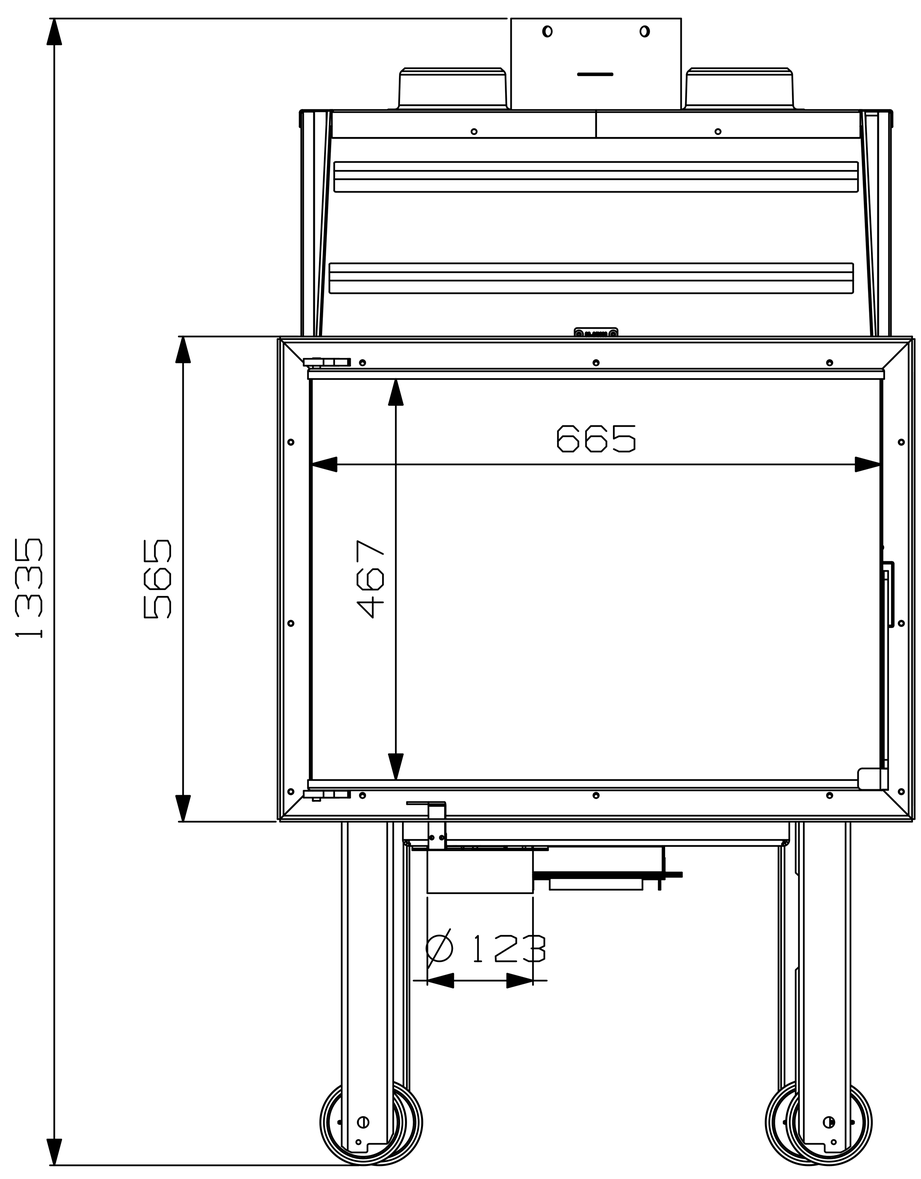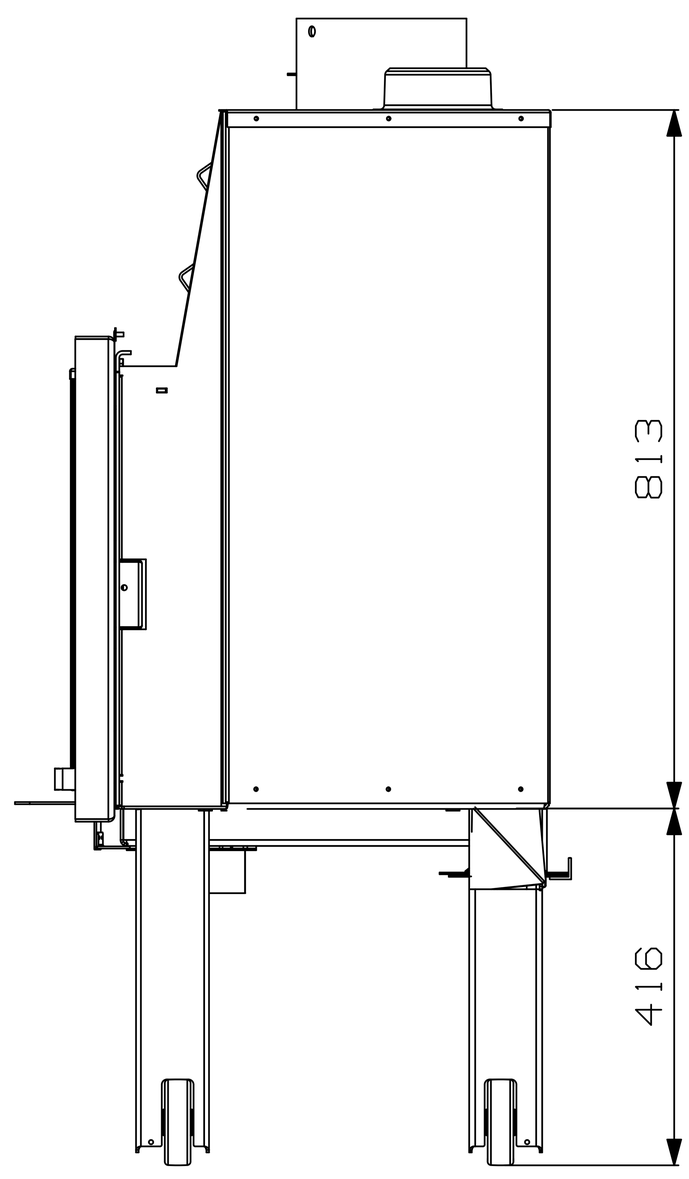AERO-S FLAT 70 BLACKLINE