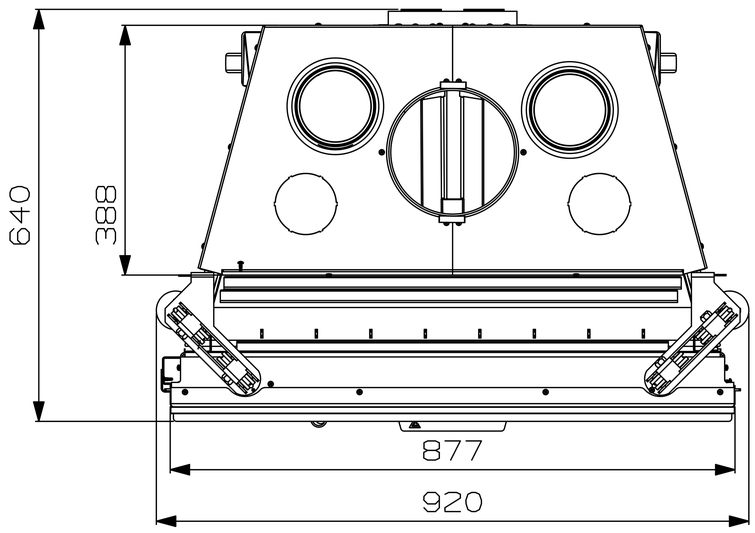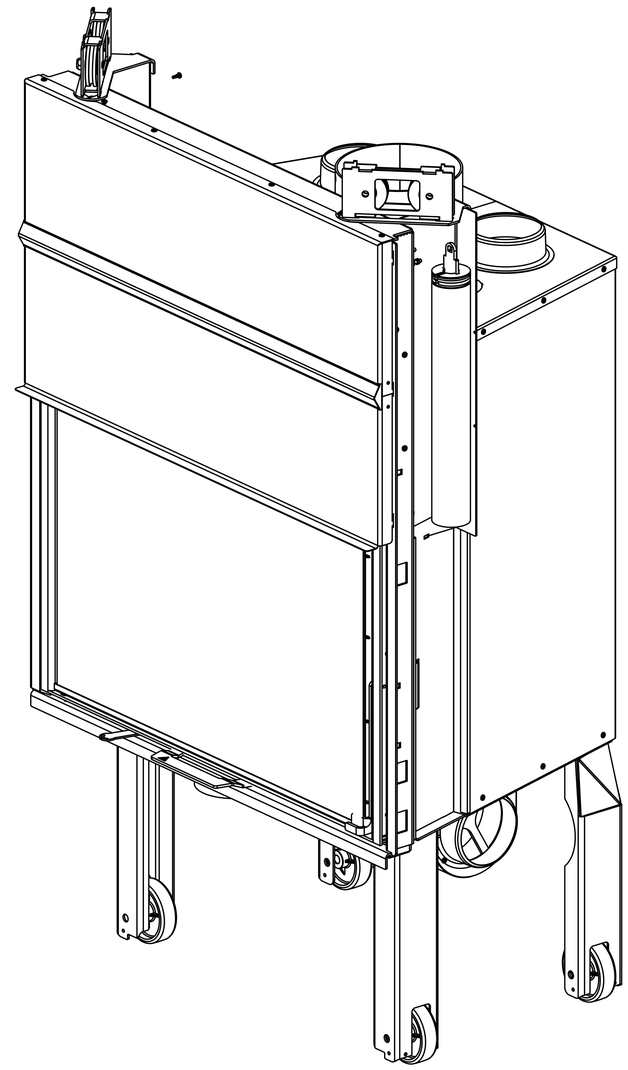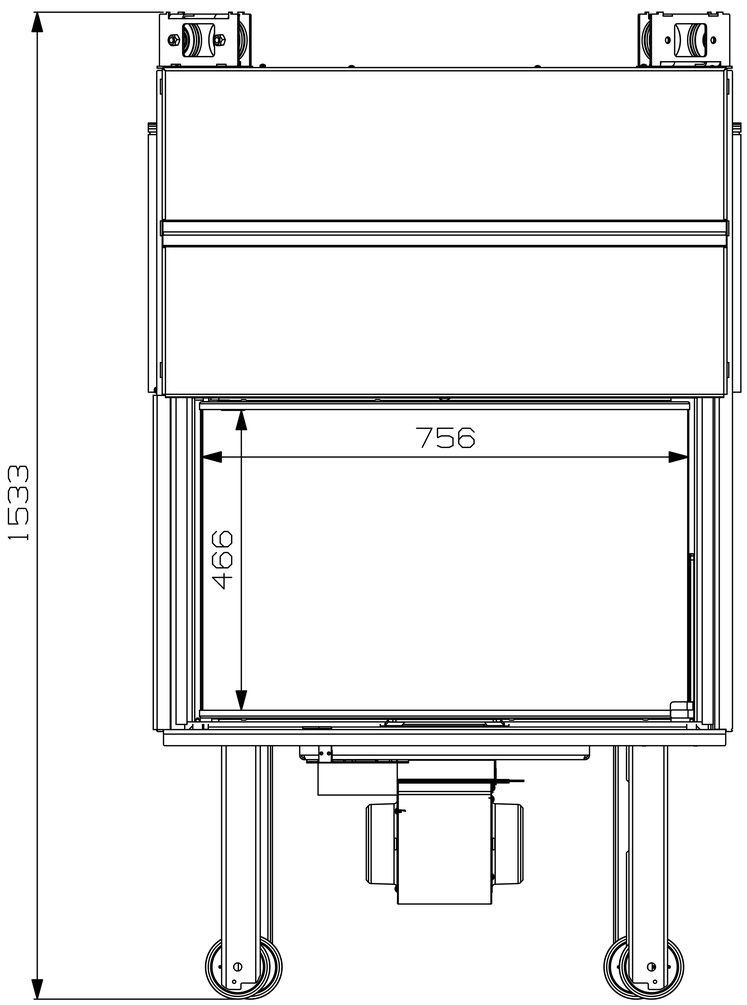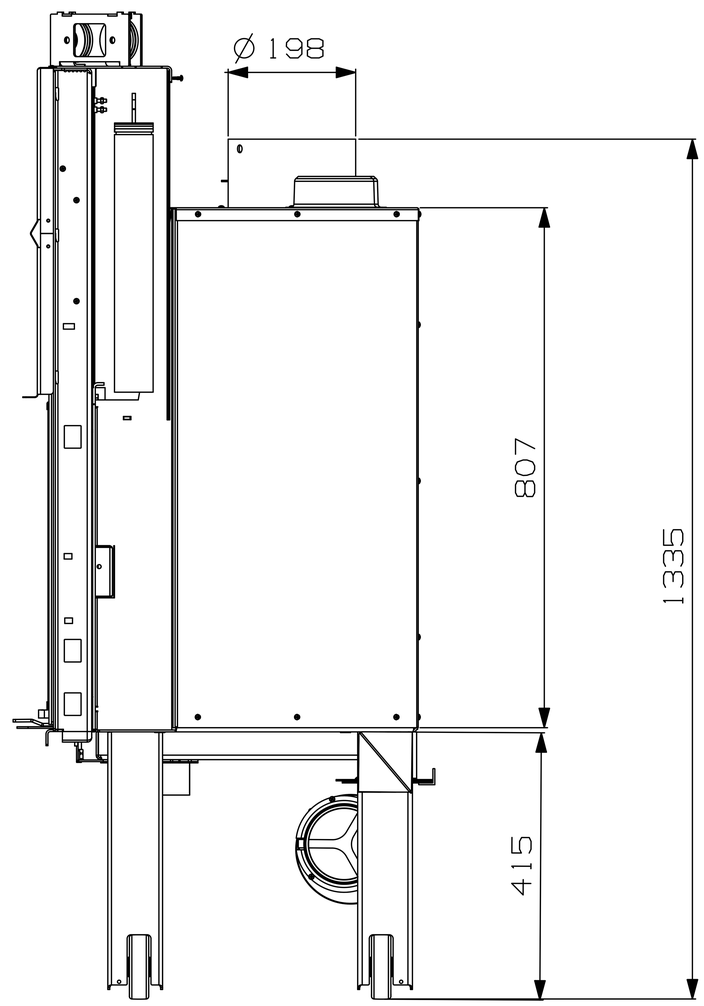AERO-S FLAT 80 BLACKLINE LIFT