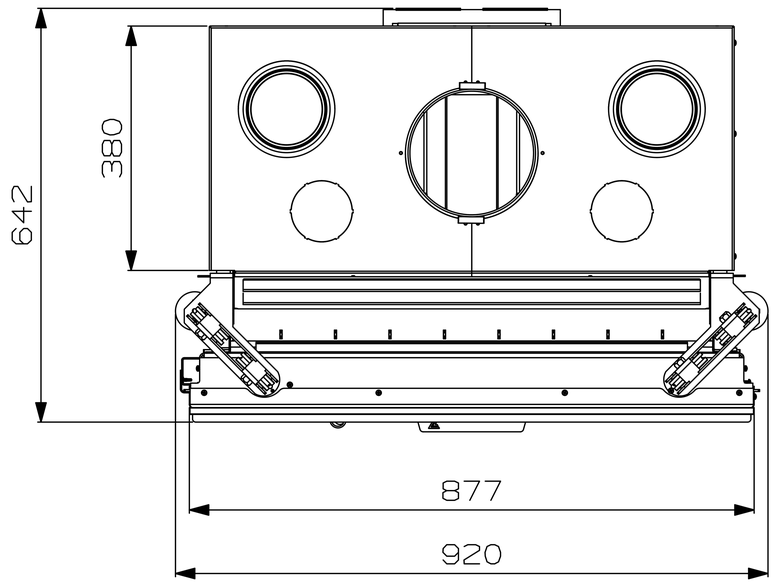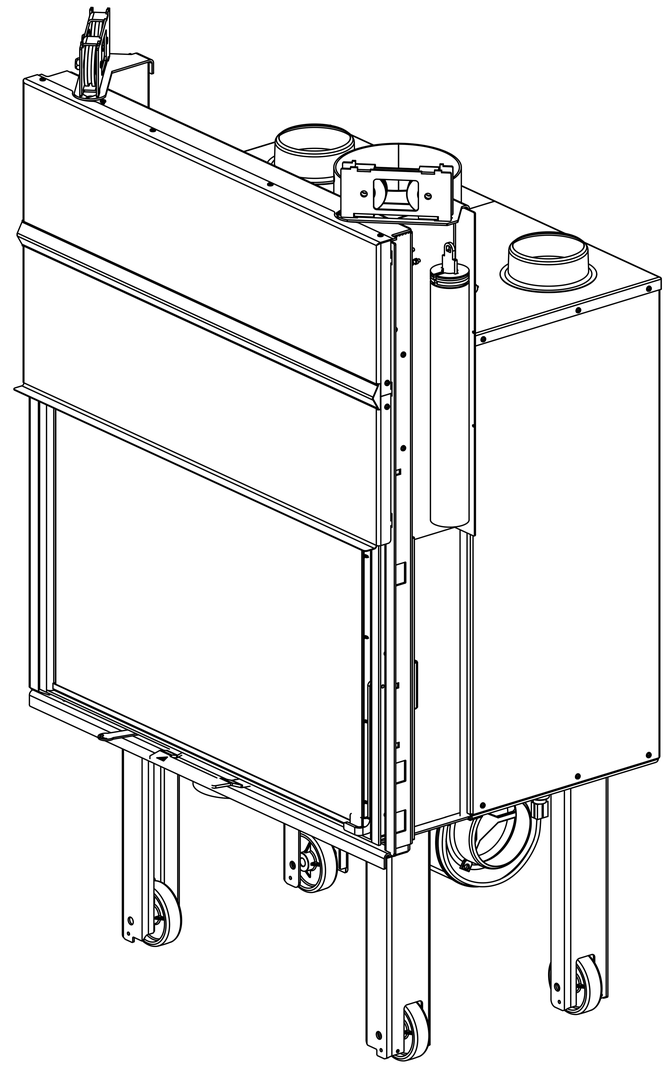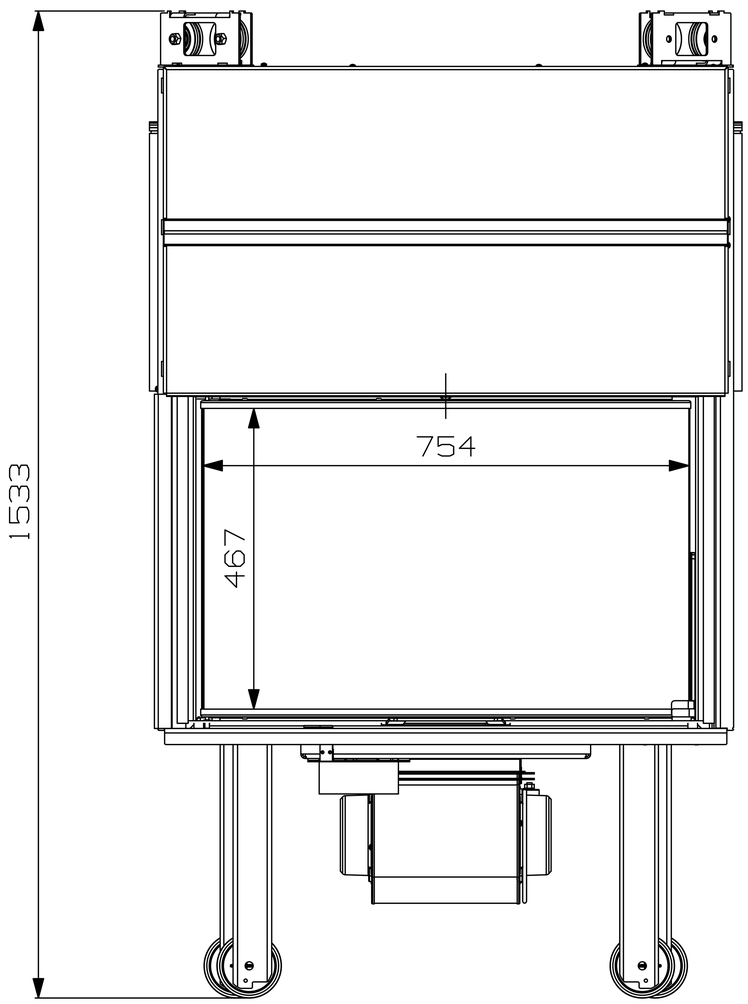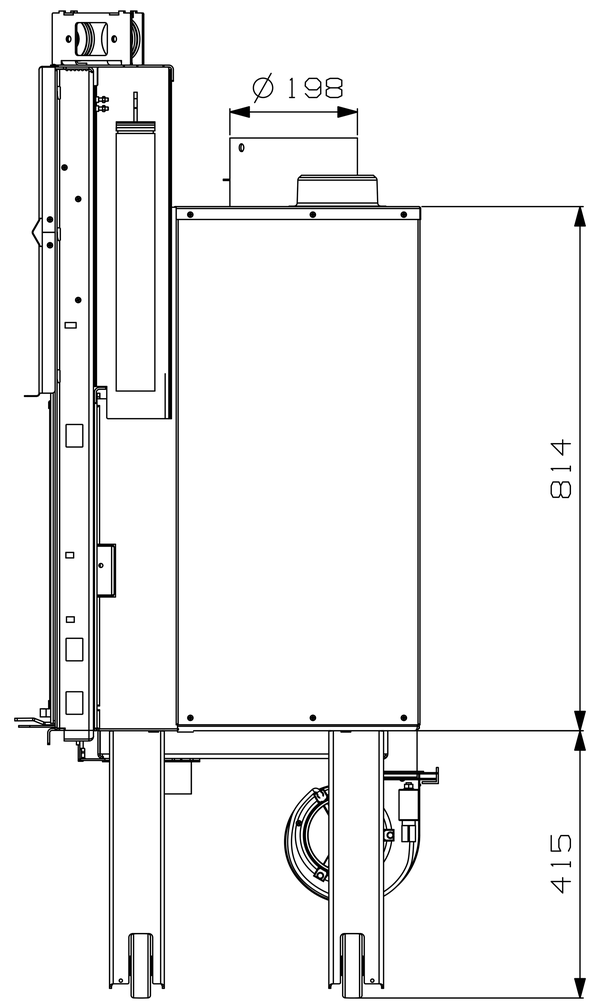AERO-S FLAT 90 BLACKLINE LIFT