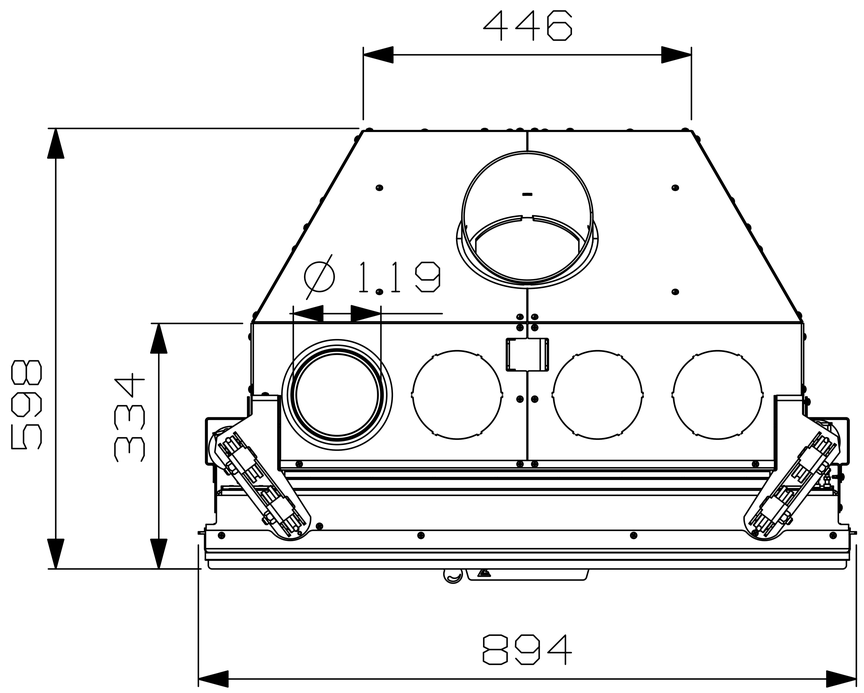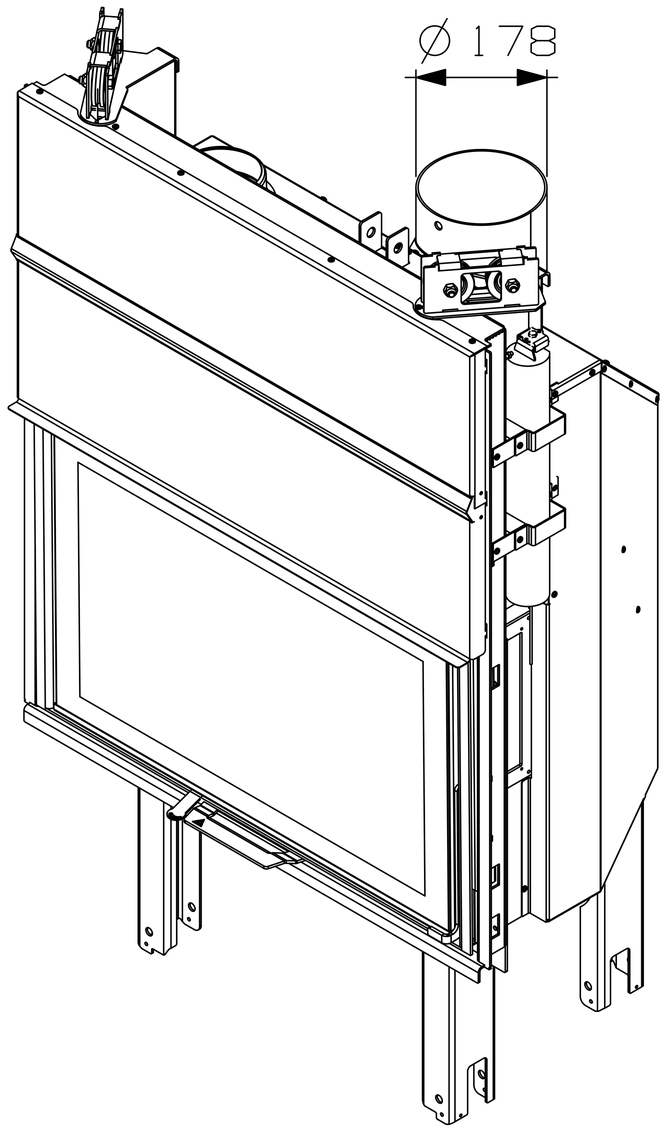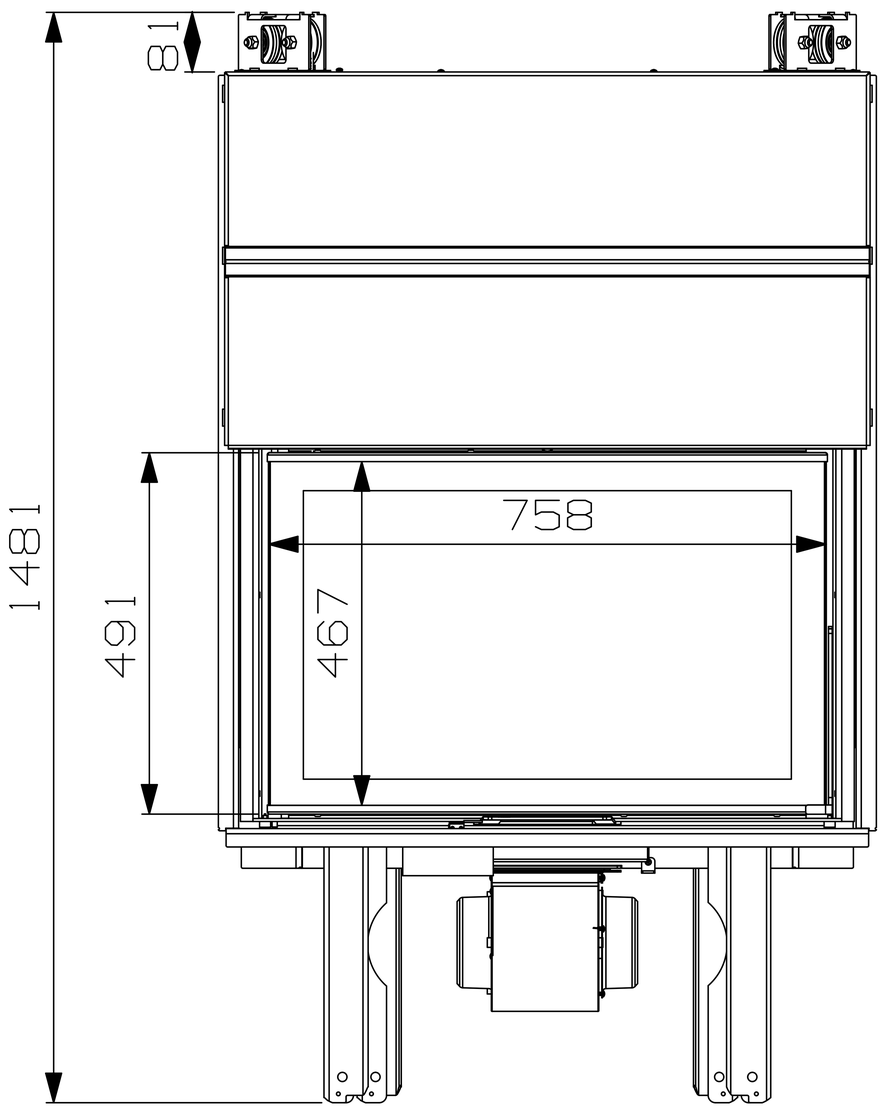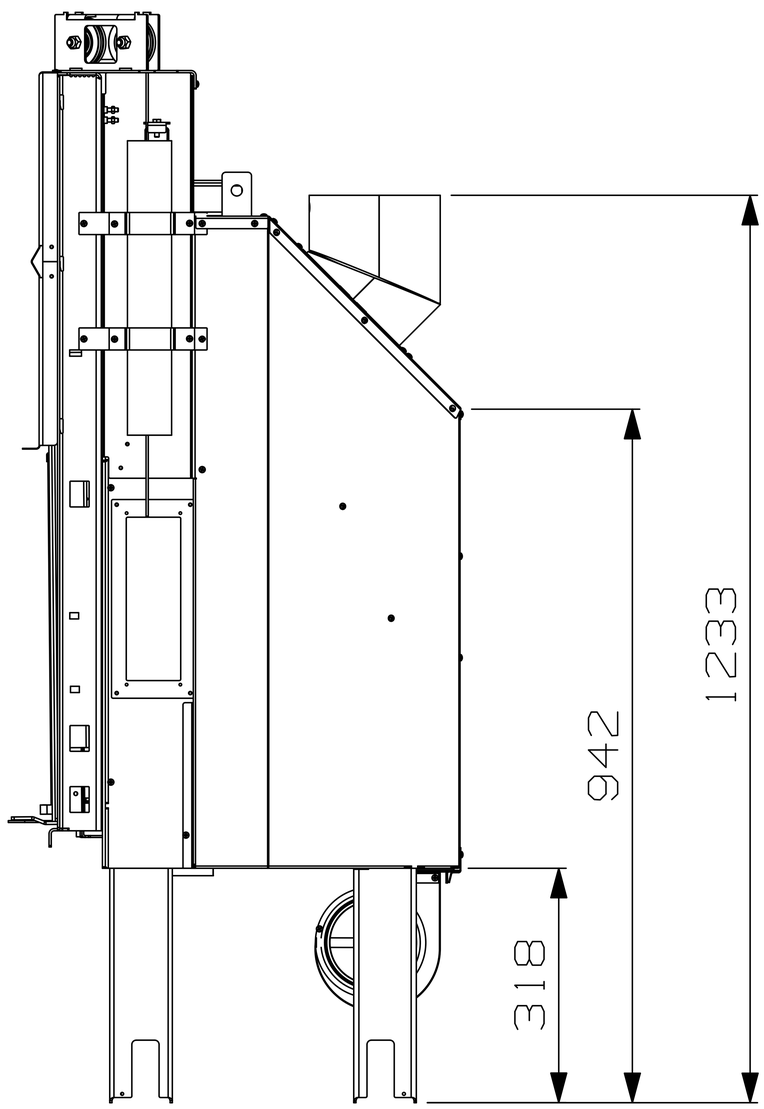FR 760 LIFT