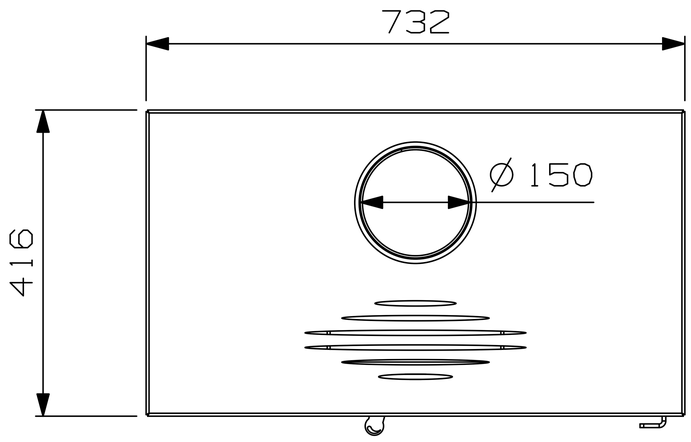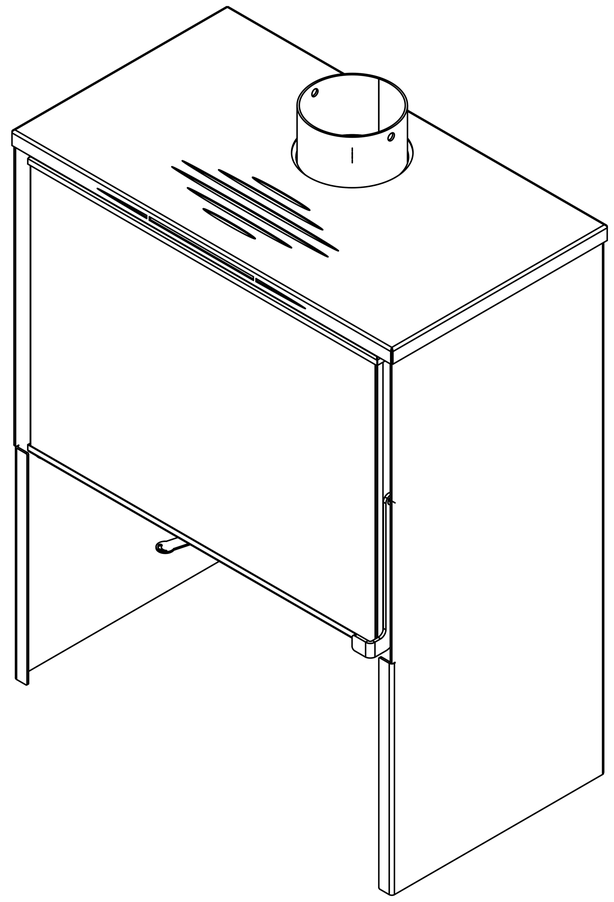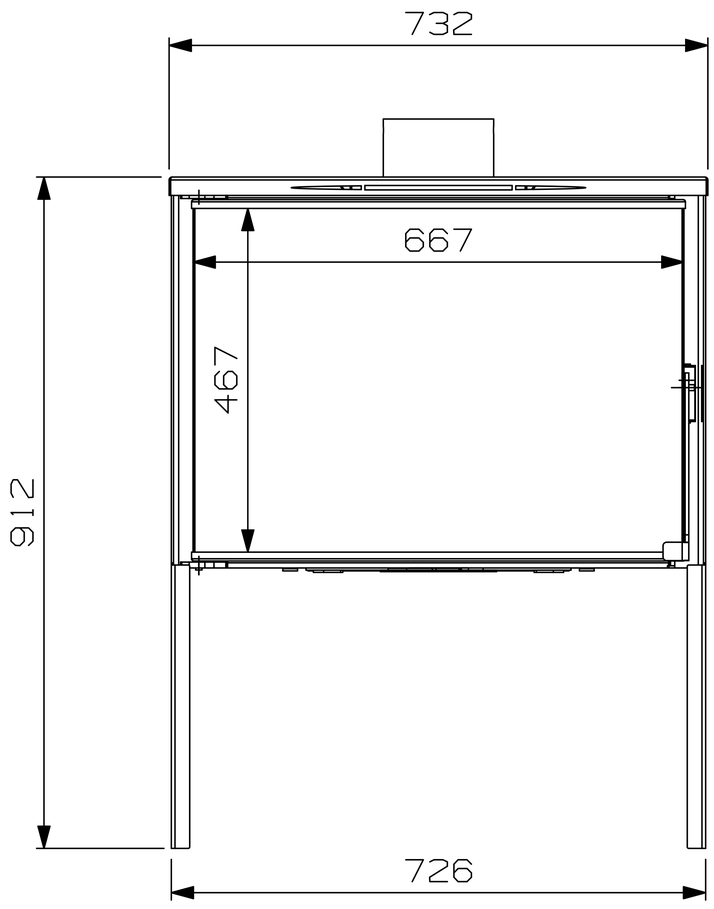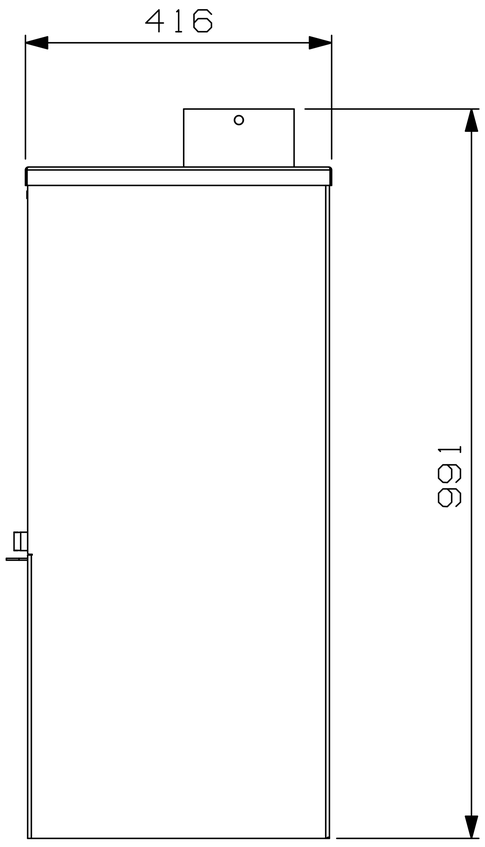V70 WITH SIDE LEGS